BRTR07WDS5PC Technical Specifications

Power sourse (KVA)	Power Supply (V)	Recommended IMM (T)	Traverser Stroke	Traverser Stroke (mm)	Crosswise Stroke (mm)	Vertical Stroke(mm)	Stand-by station (mm)	Max loading (Kg)	Cycle time (s)	Dry take out time(s)	Arm model	Model of EOAT	Angel	Working air pressure (MPa)	Air consumption (N-l /cycle)	Positiong accuracy (mm)	Complete machine size (mm)	Net weight (Kg)
3.5	220	50-200	AC servo motor	1300	P: 300 R: 125	720	P: 200 R: 240	3	4.75	1.02	Two arms and telescopic type	4 suctions 2 fixtures	C axis: 90°	0.5-0.6	4.0	±0.05	2280*1345*1220	270

transverse				Crosswise					Obverse arm					Deputy arm				
Transverse electrical machines	Reducer	Slide rail	Gear rack / Belt	Electrical machines	Reducer	Slide rail	Gear rack / Belt	air cylinder	Electrical machines	Reducer	Slide rail	Gear rack / Belt	Air cylinder	electrical machines	Reducer	Slide rail	Gear rack /Belt	Air cylinder
400W	400W 1: 9	25mm	belt-: 20mm	400W*2	400W*2 1: 9	20mm	gear rack: 20mm	\	750W	750W 1:9	20mm 15mm	Belt: 20mm gear rack: 20mm	\	750W	750W 1:5	20mm 15mm	belt: 20mm 20mm	\

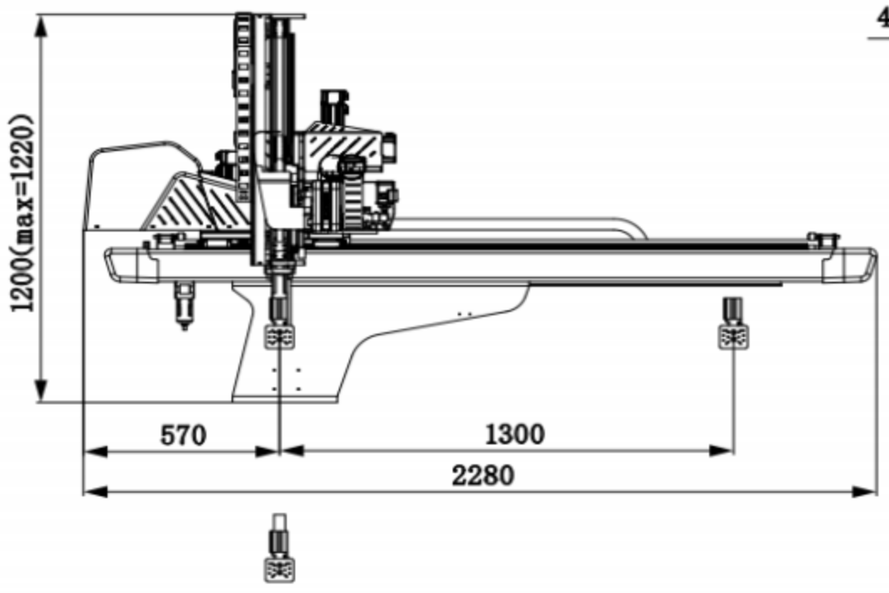

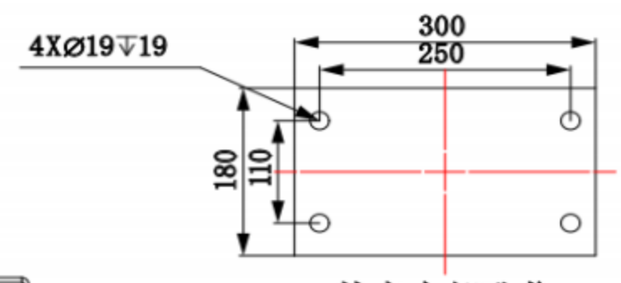

基座底部孔位

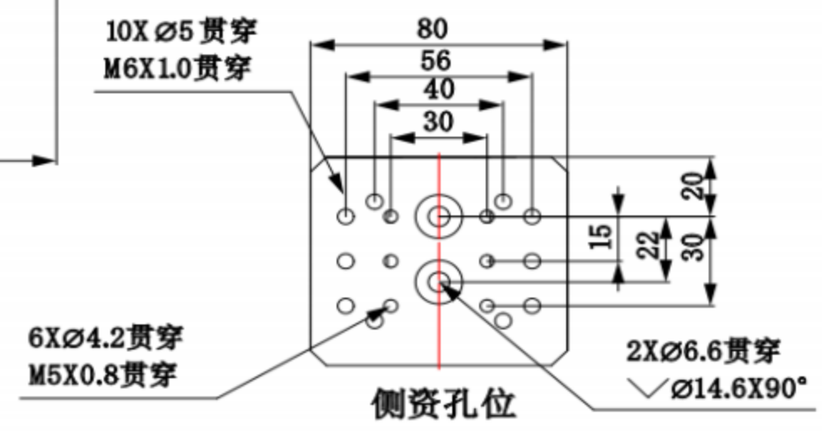

侧资孔位

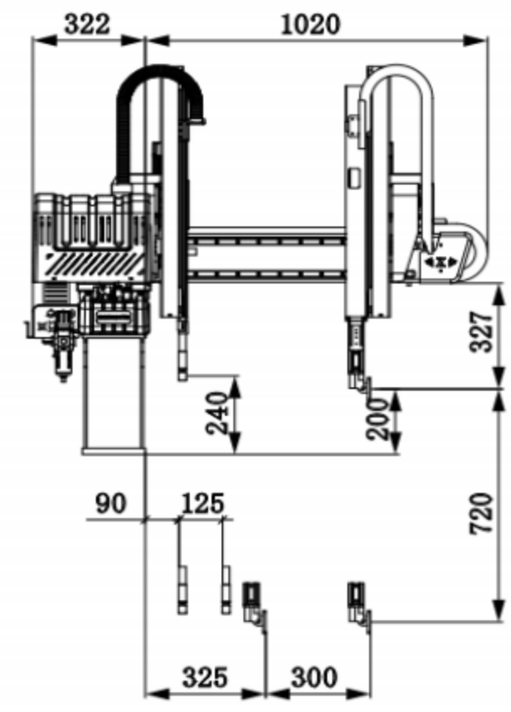

No further notice if the specification and appearance are changed due to improvement and other reasons. Thank you for your understanding.